DISC BRAKES wilwood

OE-STYLE BRAKE KITS

1969 - 1989

CLASSIC PORSCHE 911

PORSCHE OE Replacement Brake Kits, Rotors, D31/D45 Calipers & Pads for Base Model 911 (1969-89)

Wilwood has engineered direct replacement brake components for classic air-cooled Porsches using the latest and greatest technologies and manufacturing capabilities. Upgrade to modern braking performance with lightweight forged aluminum calipers, iron alloy rotors, performance brake pads, or complete brake kits with stainless steel Flexlines.

Components will bolt on as direct OE replacements for 1969-89 Porsche 911s with two piston calipers and 3.00" or 3.50" mounting tabs and are compatible with the factory master cylinder. (Turbo and Turbo-Look models excluded)

DESIGNED · TESTED USA MANUFACTURED

CALIPER COLOR OPTIONS
*Additional charges may apply.

Complete Front Brake Kits D31/D45

Complete Rear Brake Kits D31

D45 Front Calipers

D31 Rear Calipers

KIT FEATURES:

- Calipers continuously refined through modern engineering and manufacturing methods, including FEA (Finite Element Analysis) providing strength where needed
- Choose kits or components for OE bolt-on replacement

CALIPERS: D31/D45

- Rigid, forged aluminum two piston calipers with internal crossover tubes
- One-piece stainless steel pistons slow heat transfer and resist corrosion
- Calipers are finished in LeMans Yellow, Competition Red, or Gloss Black powder coat, or 23 additional color options (additional charges applies)

ROTORS: PLAIN or SRP DRILLED & SLOTTED

- Vented rotors in plain face, or black E-coated **SRP** drilled and slotted
- Available in four sizes to match the OE sizes from 1969-89 11.10" x .80" (282 x 20mm); 11.10" x .95" (282 x 24mm); 11.42" x .80" (290 x 20mm); 11.42" x .95" (290 x 24mm)

BRAKE PADS: BP-10

- BP-10 street performance pads (other compounds available)

INSTALLATION PARTS:

- Stainless steel Flexlines, BP-10 brake pads and all premium-grade hardware for installation are included with kits

4700 Calle Bolero, Camarillo, CA 93012 • wilwood.com • Sales: (805) 388-1188 • E-mail Tech Assistance: info@wilwood.com

FL553 • REV DATE: 2/14/2025

wilwood DISC BRAKES

OE-STYLE BRAKE KITS

1969 - 1989

CLASSIC PORSCHE 911

TYPICAL INSTALLATION CONFIGURATION - D45 FRONT

WARNING
INSTALLATION OF THIS KIT SHOULD **ONLY** BE PERFORMED BY PERSONS EXPERIENCED IN THE INSTALLATION AND PROPER OPERATION OF DISC BRAKE SYSTEMS.

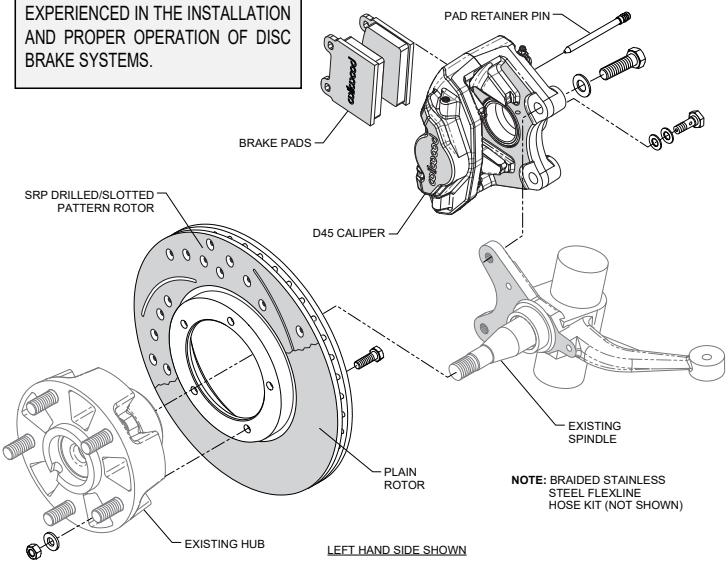

TYPICAL INSTALLATION CONFIGURATION - D31 REAR

NOTE
SPECIFIC PARTS MAY VARY FROM DIAGRAM

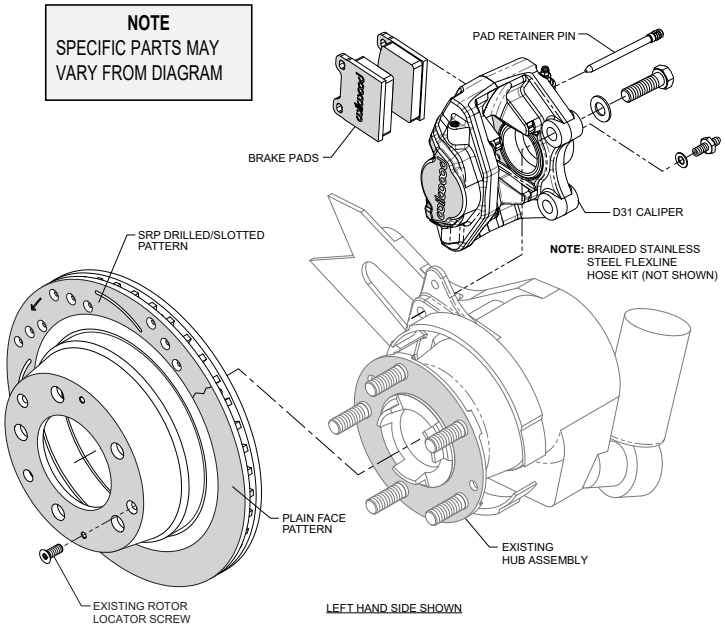

ORDERING INFO: PH: 805.388.1188 • FAX: 805.388.4938 • wilwood.com • info@wilwood.com

OE REPLACEMENT BRAKE KITS

BLACK	RED	Le Mans YELLOW	DESCRIPTION / YEAR	ROTOR SIZE	ROTOR TYPE
140-17652	140-17652-R	140-17652-Y	D31 Front Kit, 3.00 MT 1969-74	11.10" x .80" (282mm x 20mm)	Plain Face
140-17652-D	140-17652-DR	140-17652-DY	D31 Front Kit, 3.00 MT 1969-74	11.10" x .80" (282mm x 20mm)	SRP Drilled/Slotted
140-17653	140-17653-R	140-17653-Y	D45 Front Kit, 3.50 MT 1975-83	11.10" x .80" (282mm x 20mm)	Plain Face
140-17653-D	140-17653-DR	140-17653-DY	D45 Front Kit, 3.50 MT 1975-83	11.10" x .80" (282mm x 20mm)	SRP Drilled/Slotted
140-17654	140-17654-R	140-17654-Y	D45 Front Kit, 3.50 MT 1984-89	11.10" x .95" (282mm x 24mm)	Plain Face
140-17654-D	140-17654-DR	140-17654-DY	D45 Front Kit, 3.50 MT 1984-89	11.10" x .95" (282mm x 24mm)	SRP Drilled/Slotted
140-17655	140-17655-R	140-17655-Y	D31 Rear Kit, 3.00 MT 1969-83	11.42" x .80" (290mm x 20mm)	Plain Face
140-17655-D	140-17655-DR	140-17655-DY	D31 Rear Kit, 3.00 MT 1969-83	11.42" x .80" (290mm x 20mm)	SRP Drilled/Slotted
140-17656	140-17656-R	140-17656-Y	D31 Rear Kit, 3.00 MT 1984-89	11.42" x .95" (290mm x 24mm)	Plain Face
140-17656-D	140-17656-DR	140-17656-DY	D31 Rear Kit, 3.00 MT 1984-89	11.42" x .95" (290mm x 24mm)	SRP Drilled/Slotted

Note: Brake kits and components fit the base model Porsche 911s, excluding Turbo and Turbo-Look models with four piston calipers

OE REPLACEMENT CALIPERS

120-17160-BK	120-17160-RD	120-17160-Y	Caliper, D31 Front, 3.00 MT 1969-74	11.10" x .80" (282mm x 20mm)	N/A
120-17163-BK	120-17163-RD	120-17163-Y	Caliper, D31 Rear, 3.00 MT 1969-83	11.42" x .80" (290mm x 20mm)	N/A
120-17166-BK	120-17166-RD	120-17166-Y	Caliper, D31 Rear, 3.00 MT 1984-89	11.42" x .95" (290mm x 24mm)	N/A
120-17169-BK	120-17169-RD	120-17169-Y	Caliper, D45 Front, 3.50 MT 1975-83	11.10" x .80" (282mm x 20mm)	N/A
120-17172-BK	120-17172-RD	120-17172-Y	Caliper, D45 Front, 3.50 MT 1984-89	11.10" x .95" (282mm x 24mm)	N/A